ITEM	DESCRIPTION	QTY	STORES ITEM NO	DRG NO CEE–
1	CLAMPING BRACKET	1	———	TMHA–84 ITEM 1
2	STEEL, ANGLE, 70 x 70 x 6 x "A" LG	1	———	———
3	STEEL, FLAT, 50 x 10 x 50 LG (11/12381)	1	———	———

AMENDMENTS		
NO	NAME	DATE
1	J DU PLESSIS	94–08–17

DRG REVISED.
DRG NO WAS CEE–TMF–208.
NOTE 2 ADDED.
DO REF: T94/040.

DEAILS OF USE	DIMENSION "A"
2,75m MAST ℄ – TRACK ℄	1000
3,2m MAST ℄ – TRACK ℄	1450
3,7m MAST ℄ – TRACK ℄	1950
WITH HOCKEY STICK	600

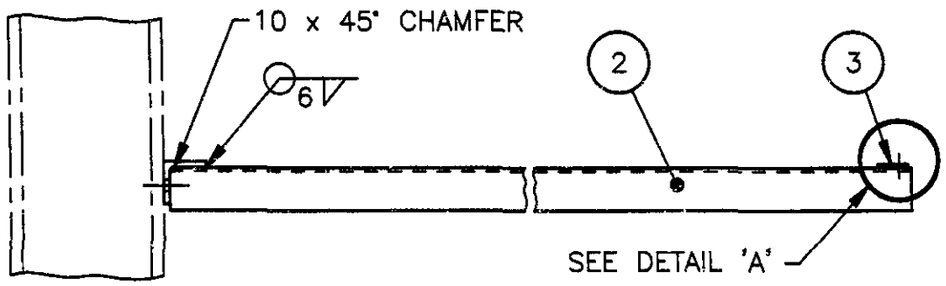

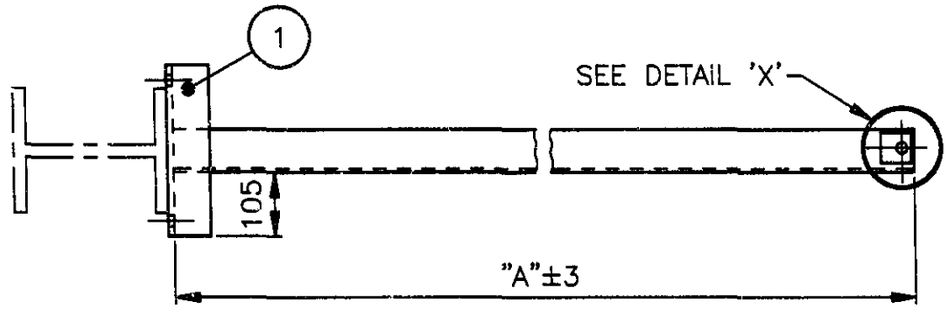

FINISH
ZINC COAT TO SPEC SABS 763
FOR CONDITIONS IN SITU.

NOTES
1. WELDING TO CONFORM TO SPEC BS 5153.
2. FOR STEADY ARM ATTACHMENT EXTENSION BRACKET FOR NON–STANDARD MAST–TO–TRACK CENTRES SEE DRG NO CEE–TMFB–123.

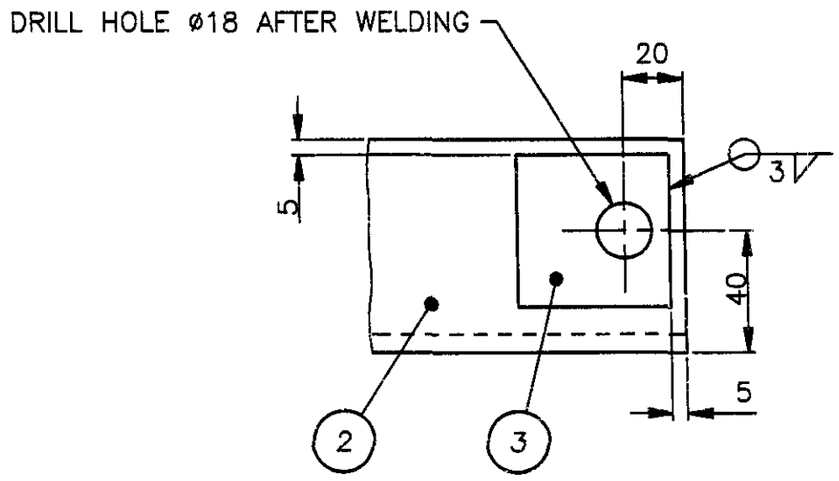

DETAIL 'X'
SCALE 1:2

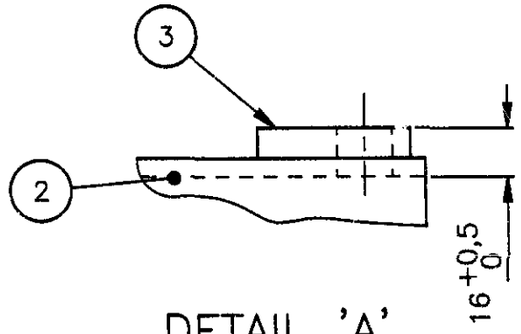

DETAIL 'A'
SCALE 1:2

STORES ITEM NO ———

DIMENSIONS: mm
SCALE: 1:10

A3

DO REF: Y76/43	GEN TOL: LIN ±1	ANG± 2'
DRN: J HIBBERS	CKD: WRG	DATE: 78–03–31
ENG: I DE VILLIERS	F PIENAAR	for CHIEF ENG
INFRASTRUCTURE (ELECTRICAL)	SPOORNET	

STEADY ARM AND HOCKEY STICK ATTACHMENT

203 x 203 UNIVERSAL COLUMNS.

DRAWING NO CEE–TMFB–124

SHEET —— OF ——

10000633